RV1126_RV1109_BATTERY_IPC_SMARTBELL_REF_V11

Quick start solution

RV1126_RV1109 Main difference		
	RV1126	RV1109
CPU	Quad A7	Dual A7
NPU	2.0Tops	1.2Tops
ISP	14M Pixel	5M Pixel

Reference Design Main Functions Introduction	
Power	Discrete Power
RAM	EMMC/SLC NAND FLASH/SPI FLASH
ROM	DDR3L/DDR3/LPDDR3/LPDDR4
Interface	SDMMC/SDIO/CIF/MIPI_DSI/MIPI_CSI0/ MIPI_CSI1/I2S/USB/ADC

Rockchip Confidential

Index and Notes

Table of Content

Page01	00.Cover Page
Page02	01.Index and Notes
Page03	02.Revision History
Page04	03.Block Diagram
Page05	04.Power Sequence
Page06	05.I2C MAP
Page07	06.IO Power Domain Map
Page08	10.RV1126/1109 Power/GND
Page09	11.RV1126/1109 OSC/PLL/PMUIO
Page10	12.RV1126/1109 DRAM Controller
Page11	13.RV1126/1109 Flash/SD
Page12	14.RV1126/1109 USB Controller
Page13	15.RV1126/1109 SARADC
Page14	16.RV1126/1109 VideoInput
Page15	17.RV1126/1109 VideoOutput
Page16	18.RV1126/1109 Audio
Page17	23.Discrete Power for System
Page18	24.Discrete Power for Camera
Page19	25.Wakeup Power/Charge
Page20	26.USB OTG
Page21	30.RAM DDR3 96P 2X16bit DD6(option)
Page22	31.RAM LPDDR3 178P
Page23	32.RAM DDR4 96P 2X16bit(option)
Page24	33.RAM LPDDR4 200P(option)
Page25	40.Flash eMMC Flash
Page26	41.Flash Nand Flash(option)
Page27	42.Flash-Micro-SD Card
Page28	43.Flash SPI Flash(option)
Page29	45.VI-Camera CIF
Page30	47.VI-Camera MIPI-CSI
Page31	49.IRC/IR LED/Light sensor
Page32	62.WIFI Module
Page33	70.Audio Port
Page34	99.MARK

Note

NOTE 1:
Component parameter description
1. DNP stands for component not mounted temporarily
2. If Value or option is DNP, which means the area is reserved without being mounted

NOTE 2:
Please use our recommended components to avoid too many changes.
For more informations about the second source,please refer to our AVL.

Generate Bill of Materials

Header:

Item\tPart\tDescription\tPCB Footprint\tReference\tQuantity\tOption

Combined property string:

{Item}\t{Value}\t{Description}\t{PCB Footprint}\t{Reference}\t{Quantity}\t{Option}

Graphic Description

Note

Option

Description

Rockchip Confidential

Rockchip 瑞芯微电子	Rockchip Electronics Co., Ltd				
Project:	RV1126_REF				
File:	01.Index and Notes				
Date:	Monday, August 07, 2023			Rev:	V1.1
Designed by:	Yanhong.Li	Reviewed by:	<Checker>	Sheet:	2 of 34

Revision History

Version	Date	Author	Change Note	Approved
V1.0	2020.07.13	Liyh	RV1126_RV1109_BATTERY_IPC_SMARTBELL_REF_V10	
V1.1	2020.09.28	Liyh	RV1126_RV1109_BATTERY_IPC_SMARTBELL_REF_V11 Update: 1. For saving power consumption, NPU and VEPU are supplied separately. 2. For saving power consumption, the AVDD and DVDD of the camera module are powered by DCDC instead of LDO. 3. The change of audio : Es8311 can support the loop-back function, so the hardware loop-back circuit can be deleted and the single ended MIC can be change to the difference mic.	

Rockchip Confidential

IPC/Smart Bell Application Block Diagram

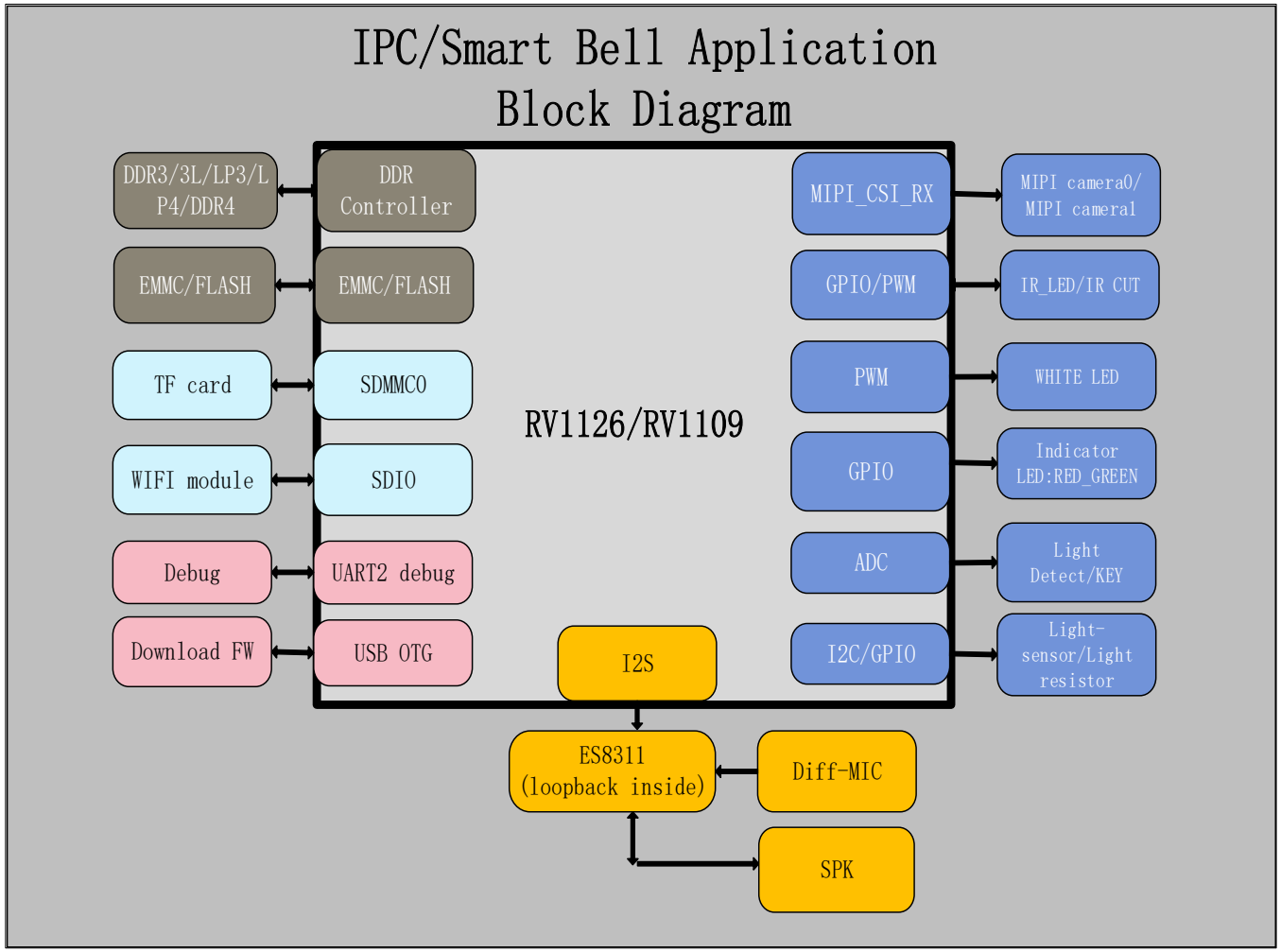

Rockchip 瑞芯微电子	Rockchip Electronics Co., Ltd				
Project:	RV1126_REF				
File:	03.Block Diagram				
Date:	Monday, August 07, 2023			Rev:	V1.1
Designed by:	Yanhong.Li	Reviewed by:	<Checker>	Sheet:	4 of 34

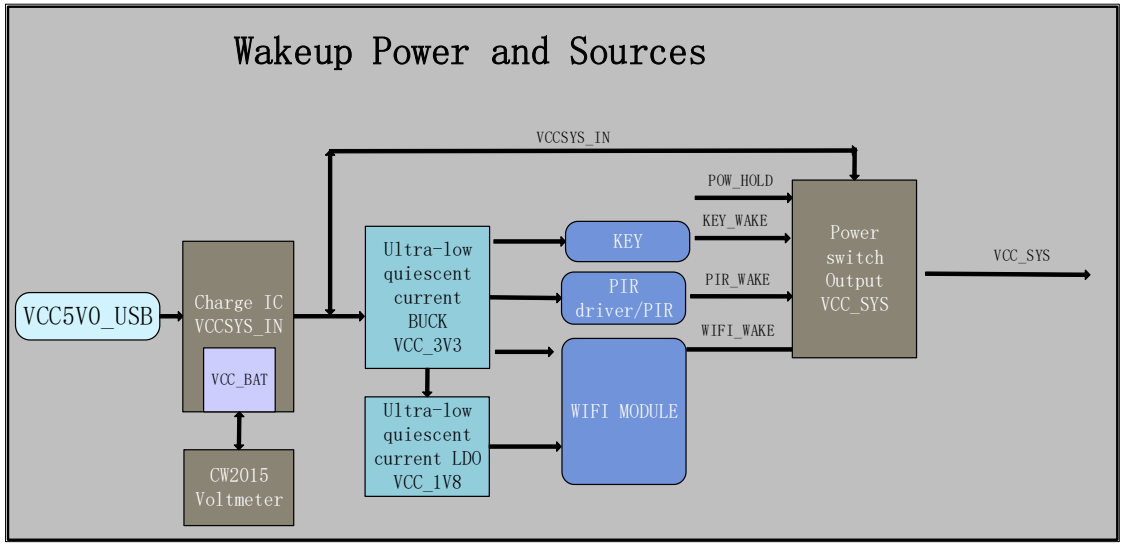

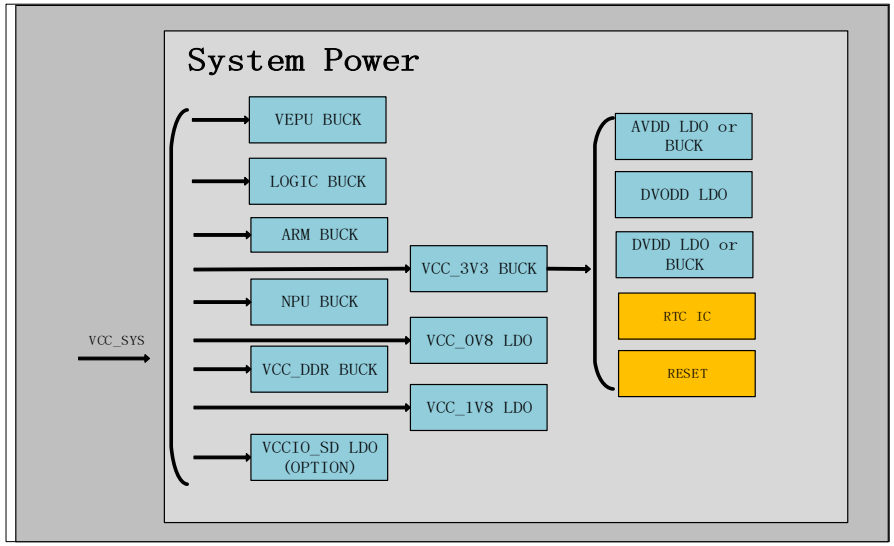

The reference power on sequence of discrete power

Power Name	Power Channel	Time Slot	Default voltage	Supply Limit	Peak Current
VCC 0V8	LDO	Slot: 1	0.8V	0.5A	
VDD LOGIC	BUCK	Slot: 2	0.8V	2.0A	1.75A
VDD ARM	BUCK	Slot: 2	0.8V	1.0A	0.73A
VDD NPU	BUCK	Slot: 2	0.8V	3.0A	2.11A
VDD VEPU	BUCK	Slot: 2	0.8V	2.0A	1.0A
VCC 1V8	LDO	Slot: 3	1.8V	2.0A	
VCC DDR	BUCK	Slot: 4	1.2V	0.4A	
VCC 3V3	BUCK	Slot: 5	3.3V	2.0A	
VCC1V8 DOVDD	LDO		1.8V	0.5A	
VCC1V2 DVDD	BUCK		1.2V	0.5A	
VCC2V8 AVDD	BUCK		2.8V	0.5A	
RESET					

NOTE:VCC_DVDD and VCC_AVDD according to camera sensor voltage

I2C MAP

Port	Bus Name	Domain	Pull-up voltage	Slave Device	Slave Addr (MS 7Bits)	Slave Bus Capability	Note
I2C0	I2C0_SCL I2C0_SDA	PMUIO1	VCC_3V3	HYM8563			
				CW2015			
I2C1	I2C1_SCL I2C1_SDA	VCCIO4	VCC_1V8	MIPI Camera			
				CIF Camera			
I2C4	I2C4_SCL_M1 I2C4_SDA_M1	VCCIO7	VCC_3V3	ES8311	0x18		
I2C5	I2C5_SCL_M0 I2C5_SDA_M0	VCCIO5_VDD	VCC_3V3	CM32181A3OP	0x48		

Rockchip Confidential

IO Power Domain Map

IO Domain	IO Group	Support of IO Voltage		Default Actual assigned IO Domain Voltage		Notes
		1.8V	3.3V	Net Name of Power Supply	Voltage	
PMUIO0	***GPIO0A***	✓	✓	*VCC_1V8*	*1.8V*	
PMUIO1	***GPIO0BC***	✓	✓	*VCC_3V3*	*3.3V*	
VCCIO1	***GPIO0CD/GPIO1A***	✓	✓	*VCCIO_FLASH*	*1.8V*	*GPIO0_B3/FLASH_VOL_SEL pin defined as a set pin for VCCIO1.*
VCCIO2	***GPIO1AB***	✓	✓	*VCCIO_SD*	*3.3V*	
VCCIO3	***GPIO1BCD***	✓	✓	*VCC_1V8*	*1.8V*	
VCCIO4	***GPIO1D/GPIO2A***	✓	✓	*VCC_1V8*	*1.8V*	
VCCIO5	***GPIO2ABCD/GPIO3A***	✓	✓	*VCC_3V3*	*3.3V*	
VCCIO6	***GPIO3ABC***	✓	✓	*VCC_1V8*	*1.8V*	
VCCIO7	***GPIO3D/GPIO4A***	✓	✓	*VCC_3V3*	*3.3V*	

Rockchip Confidential

Power

U1000N
RV1126
BGA409_14R00X14R00X0R90

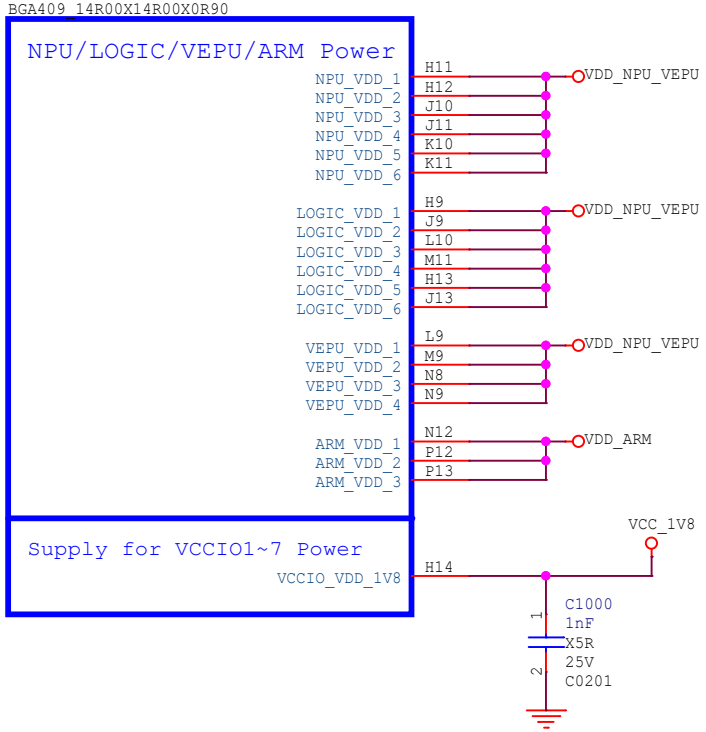

NOTE:
If any power domain of vccio 1 ~ vccio 7 is used,
then VCCIO_ VDD_ 1V8 must be connected to 1.8V power supply

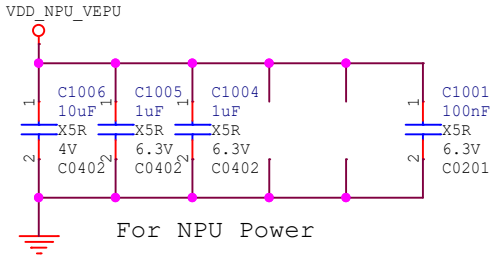

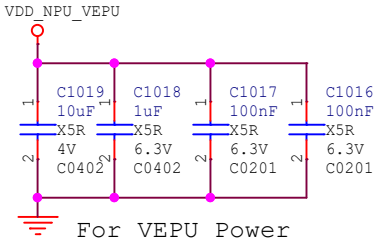

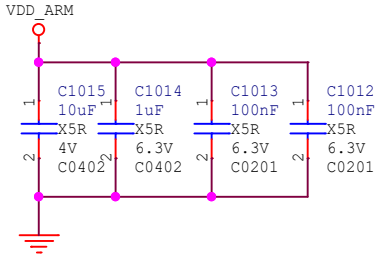

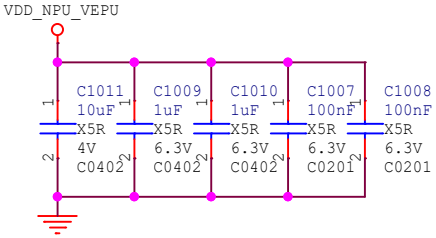

GND

U1000O
RV1126
BGA409_14R00X14R00X0R90

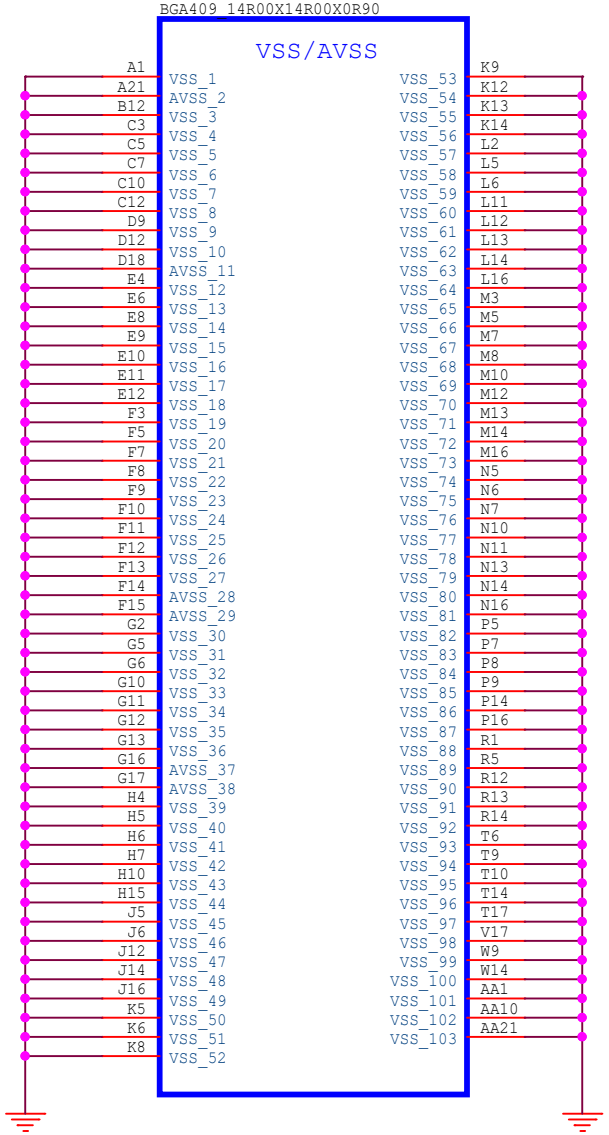

Rockchip 瑞芯微电子	Rockchip Electronics Co., Ltd				
Project:	RV1126_REF				
File:	10.RV1126/1109_Power/GND				
Date:	Monday, August 07, 2023			Rev:	V1.1
Designed by:	Yanhong.Li	Reviewed by:	<Checker>	Sheet:	8 of 34

OSC/PLL/PMUIO

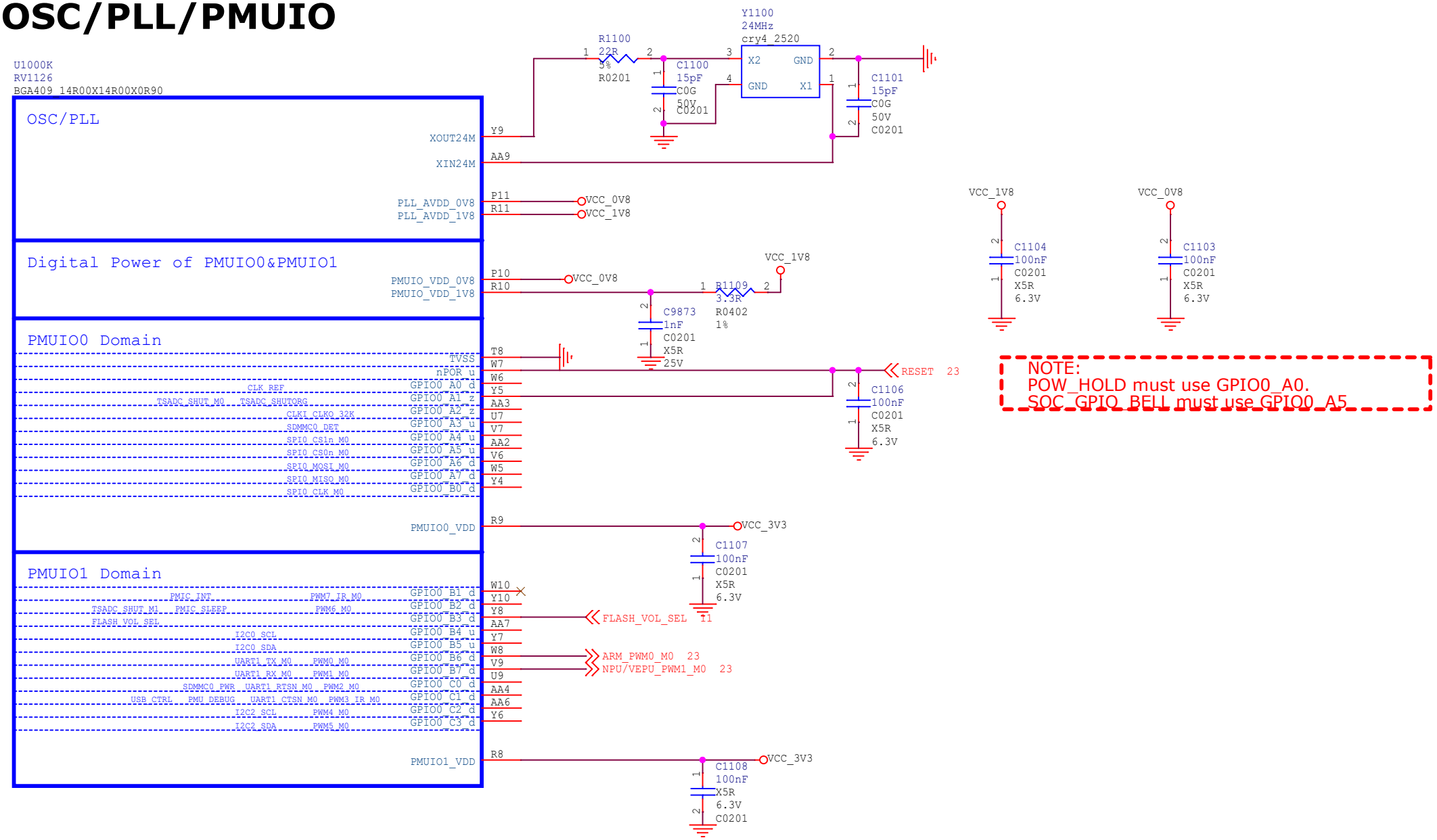

NOTE:
POW_HOLD must use GPIO0_A0.
SOC_GPIO_BELL must use GPIO0_A5

NOTE:
The power domain configuration of GPIO should match the actual power supply.

Rockchip 瑞芯微电子	Rockchip Electronics Co., Ltd				
Project:	RV1126_REF				
File:	11.RV1126/1109_OSC/PLL/PMUIO				
Date:	Monday, August 07, 2023			Rev:	V1.1
Designed by:	Yanhong.Li	Reviewed by:	<Checker>	Sheet:	9 of 34

DDR Controller

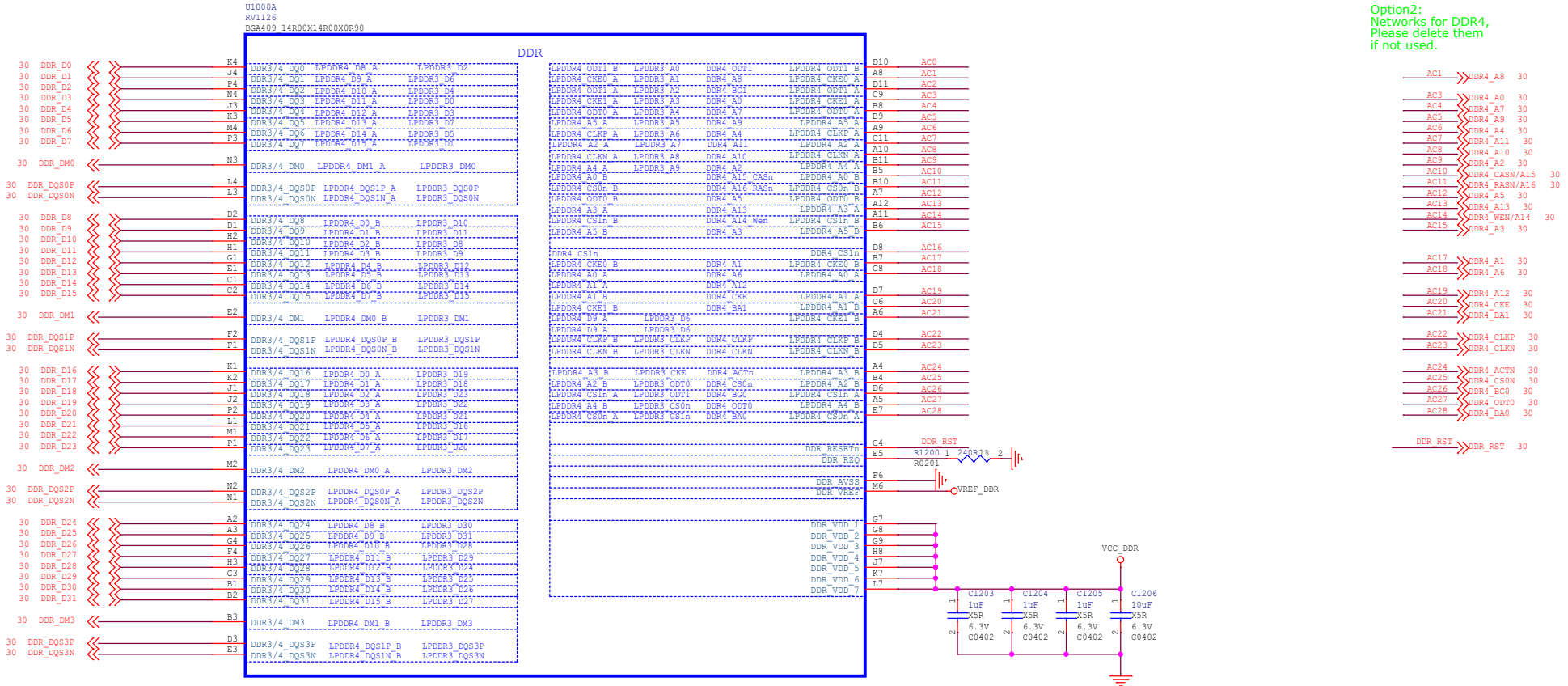

Rockchip 瑞芯微电子	Rockchip Electronics Co., Ltd		
Project:	RV1126_REF		
File:	12.RV1126/1109_DRAM Controller		
Date:	Monday, August 07, 2023	Rev:	V1.1
Designed by: Yanhong.Li	Reviewed by: <Checker>	Sheet:	10 of 34

EMMC/FLASH

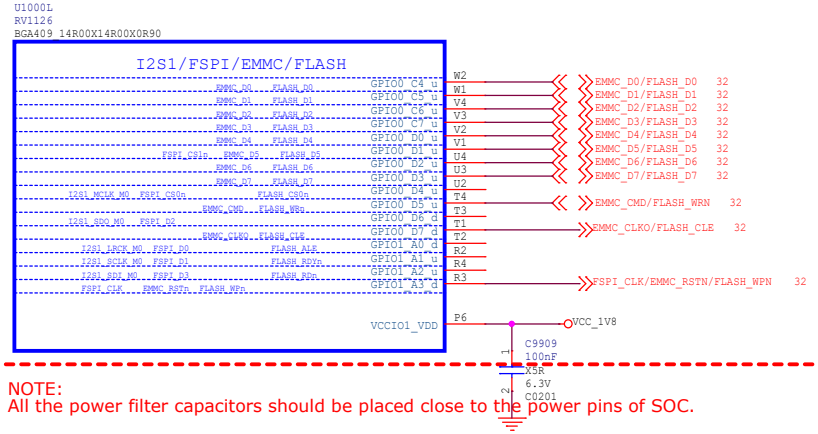

NOTE:
All the power filter capacitors should be placed close to the power pins of SOC.

NOTE:
The power domain configuration of GPIO should match the actual power supply.

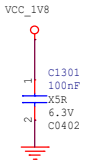

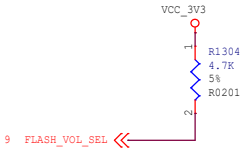

NOTE:
FLASH(VCCIO1) power domain IO supply configuration pin:

Condition	VCCIO1 (VCCIO_FLASH)
FLASH_VOL_SEL=0	3.3V
FLASH_VOL_SEL=1	1.8V Default

SDMMC0/JTAG

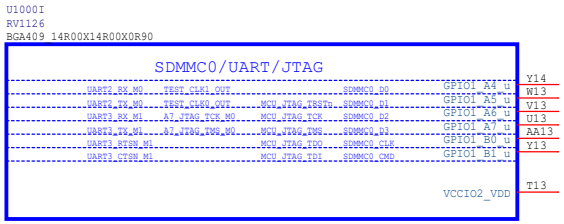

NOTE:
All the power filter capacitors should be placed close to the power pins of SOC.
If SD card is not used,please reserve MCU JTAG interface

NOTE:
The power domain configuration of GPIO should match the actual power supply.

SDMMC1/UART/I2S2

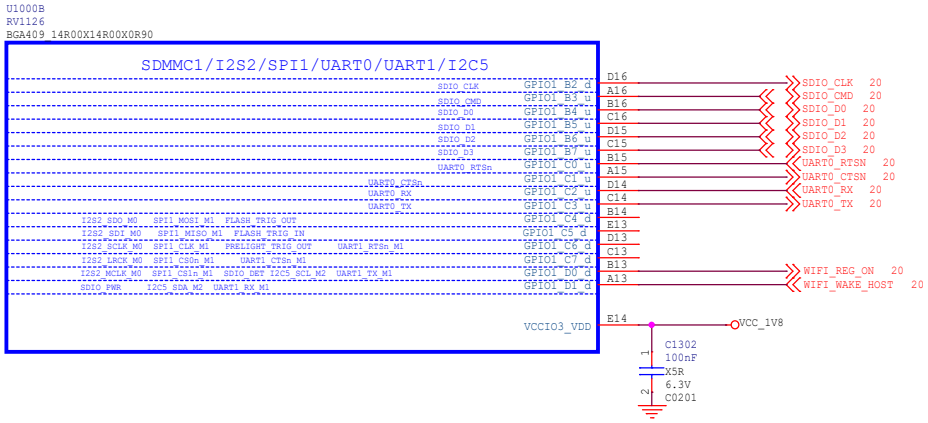

NOTE:
All the power filter capacitors should be placed close to the power pins of SOC.

NOTE:
The power domain configuration of GPIO should match the actual power supply.

Rockchip 瑞芯微电子	Rockchip Electronics Co., Ltd				
Project:	RV1126_REF				
File:	13.RV1126/1109_Flash/SD				
Date:	Monday, August 07, 2023			Rev:	V1.1
Designed by:	Yanhong.Li	Reviewed by:	<Checker>	Sheet:	11 of 34

USB Controller

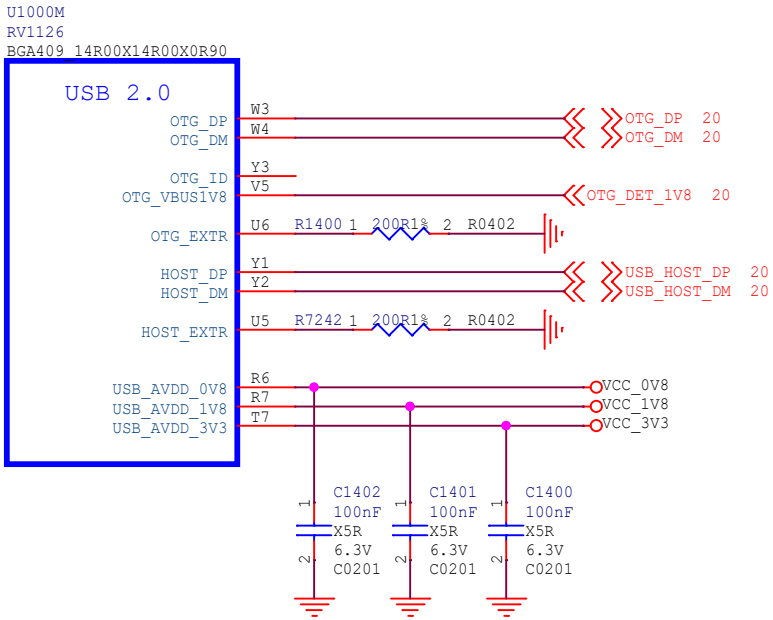

USB2.0 design rules:
1. Max intra-pair skew <4ps
2. Max trace length<6inchs
3. Max allowed via <6
4. Trace impedance 90ohm+/-10%
5. The distance between other signals follows the 3W rule.

Rockchip 瑞芯微电子	Rockchip Electronics Co., Ltd				
Project:	RV1126_REF				
File:	14.RV1126/1109_USB Controller				
Date:	Monday, August 07, 2023			Rev:	V1.1
Designed by:	Yanhong.Li	Reviewed by:	<Checker>	Sheet:	12 of 34

SARADC

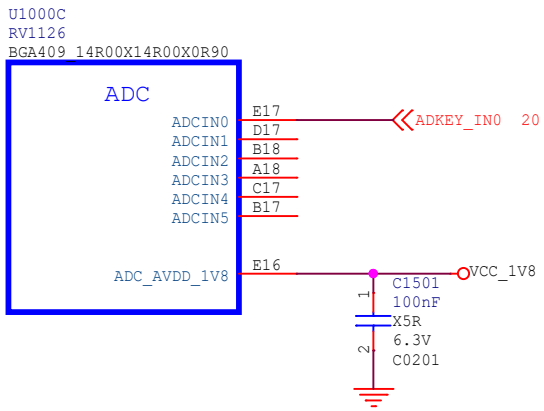

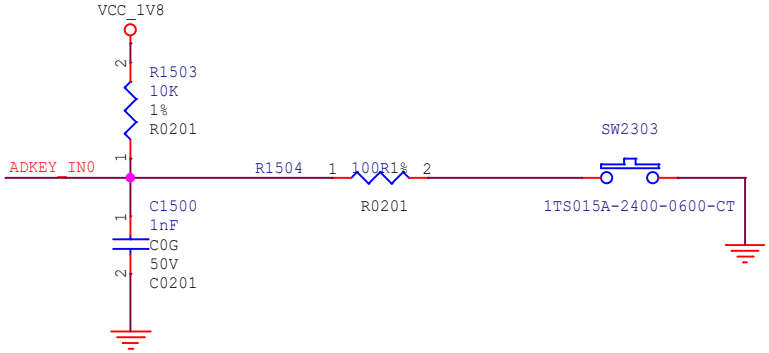

Rockchip 瑞芯微电子	Rockchip Electronics Co., Ltd				
Project:	RV1126_REF				
File:	15.RV1126/1109_SARADC				
Date:	Monday, August 07, 2023			Rev:	V1.1
Designed by:	Yanhong.Li	Reviewed by:	<Checker>	Sheet:	13 of 34

CIF Interface

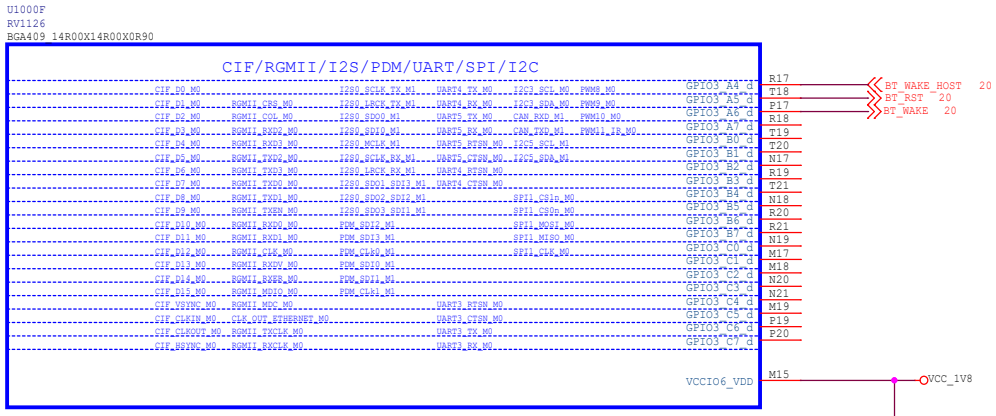

BT1120 RX	DATA:CIF_DATA[15:0] Y[0:7]:CIF_DATA[8:15] Cb[0:7]:CIF_DATA[0:7] CLOCK:CIF_CLKIN
12bit CIF camera	CameraCIF[12:0]:CIF_DATA[15:4] XCLK:CIF_CLKOUT PCLK:CIF_CLKIN HSYNC:CIF_HSYNC VSYNC:CIF_VSYNC
10bit CIF camera	CameraCIF[10:0]:CIF_DATA[15:6] XCLK:CIF_CLKOUT PCLK:CIF_CLKIN HSYNC:CIF_HSYNC VSYNC:CIF_VSYNC
8bit CIF camera	CameraCIF[8:0]:CIF_DATA[15:8] XCLK:CIF_CLKOUT PCLK:CIF_CLKIN HSYNC:CIF_HSYNC VSYNC:CIF_VSYNC

NOTE:
All the power filter capacitors should be placed close to the power pins of SOC.

NOTE:
The power domain configuration of GPIO should match the actual power supply.

MIPI-CSI Interface

MIPI_CSI_RX0 and MIPI_CSI_RX1 power pins are adjacent, so they share a decoupling capacitor
All the power filter capacitors should be placed close to the power pins of SOC.

I2C/SPI/MIPI-CLK

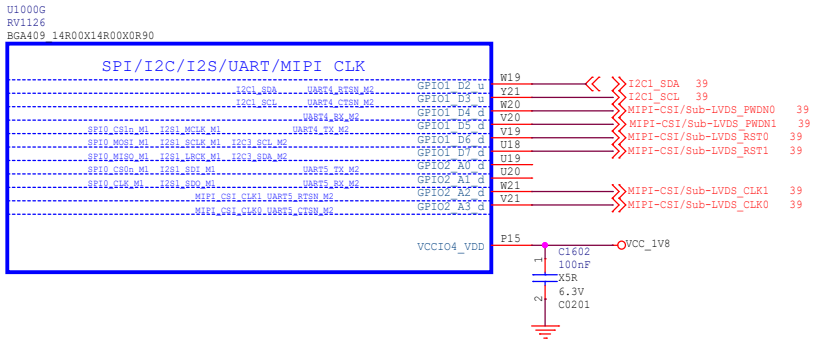

NOTE:
All the power filter capacitors should be placed close to the power pins of SOC.

NOTE:
The power domain configuration of GPIO should match the actual power supply.

Rockchip 瑞芯微电子	Rockchip Electronics Co., Ltd				
Project:	RV1126_REF				
File:	16.RV1126/1109_VideoInput				
Date:	Monday, August 07, 2023			Rev:	V1.1
Designed by:	Yanhong.Li	Reviewed by:	<Checker>	Sheet:	14 of 34

LCDC/RGMII/PWM

U1000E
RV1126
BGA409_14R00X14R00X0R90

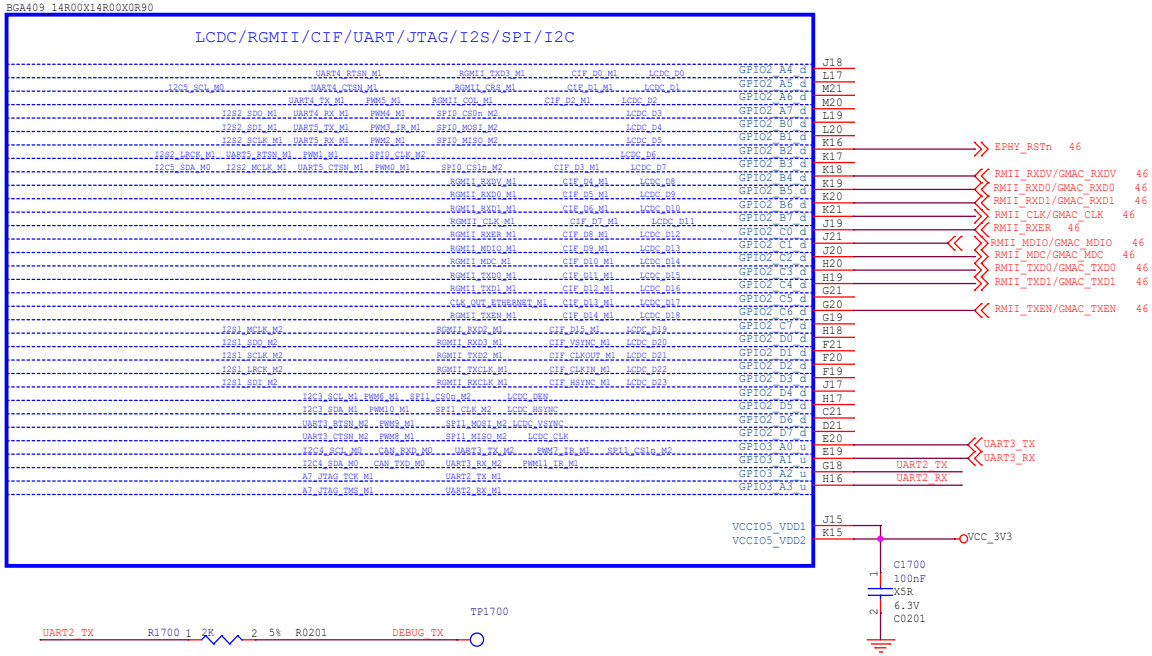

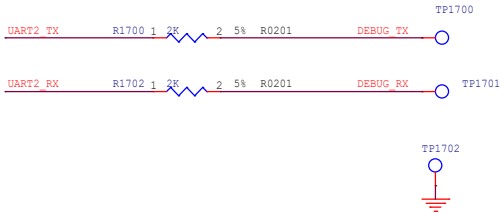

BT1120 TX	DATA:LCDC_DATA[15:0] Y[0:7]:LCDC_DATA[8:15] Cb[0:7]:LCDC_DATA[0:7] CLOCK:LCDC_CLK
6bit Serial RGB	DATA:LCDC_DATA[5:0] CLOCK:LCDC_CLK HSYNC:LCDC_HSYNC VSYNC:LCDC_VSYNC DE:LCDC_DEN
8bit Serial RGB	DATA:LCDC_DATA[7:0] CLOCK:LCDC_CLK HSYNC:LCDC_HSYNC VSYNC:LCDC_VSYNC DE:LCDC_DEN
16bit Parallel RGB(RGB656)	R[4:0]:LCDC_DATA[15:11] G[5:0]:LCDC_DATA[10:5] B[4:0]:LCDC_DATA[4:0] CLOCK:LCDC_CLK HSYNC:LCDC_HSYNC VSYNC:LCDC_VSYNC DE:LCDC_DEN
18bit Parallel RGB(RGB666)	R[5:0]:LCDC_DATA[17:12] G[5:0]:LCDC_DATA[11:6] B[5:0]:LCDC_DATA[5:0] CLOCK:LCDC_CLK HSYNC:LCDC_HSYNC VSYNC:LCDC_VSYNC DE:LCDC_DEN
24bit Parallel RGB(RGB888)	R[7:0]:LCDC_DATA[23:16] G[7:0]:LCDC_DATA[15:8] B[7:0]:LCDC_DATA[7:0] CLOCK:LCDC_CLK HSYNC:LCDC_HSYNC VSYNC:LCDC_VSYNC DE:LCDC_DEN

NOTE:
All the power filter capacitors should be placed close to the power pins of SOC.

NOTE:
The power domain configuration of GPIO should match the actual power supply.

MIPI-DSI Interface

U1000D
RV1126
BGA409_14R00X14R00X0R90

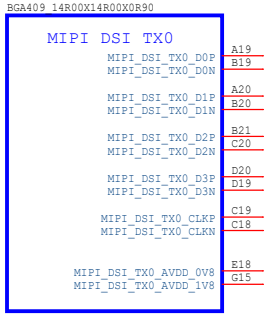

Rockchip 瑞芯微电子	Rockchip Electronics Co., Ltd				
Project:	RV1126_REF				
File:	17.RV1126/1109_VideoOutput Interface				
Date:	Monday, August 07, 2023			Rev:	V1.1
Designed by:	Yanhong.Li	Reviewed by:	<Checker>	Sheet:	15 of 34

Audio Interface

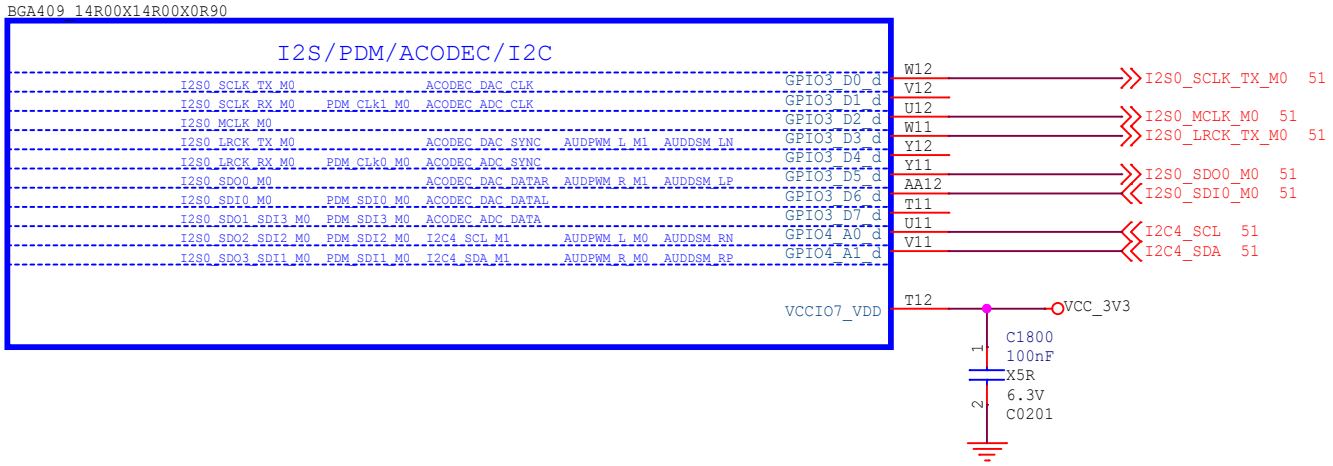

NOTE:
All the power filter capacitors should be placed close to the power pins of SOC.

NOTE:
The power domain configuration of GPIO should match the actual power supply.

Rockchip 瑞芯微电子	Rockchip Electronics Co., Ltd				
Project:	RV1126_REF				
File:	18.RV1126/1109_Audio				
Date:	Monday, August 07, 2023			Rev:	V1.1
Designed by:	Yanhong.Li	Reviewed by:	<Checker>	Sheet:	16 of 34

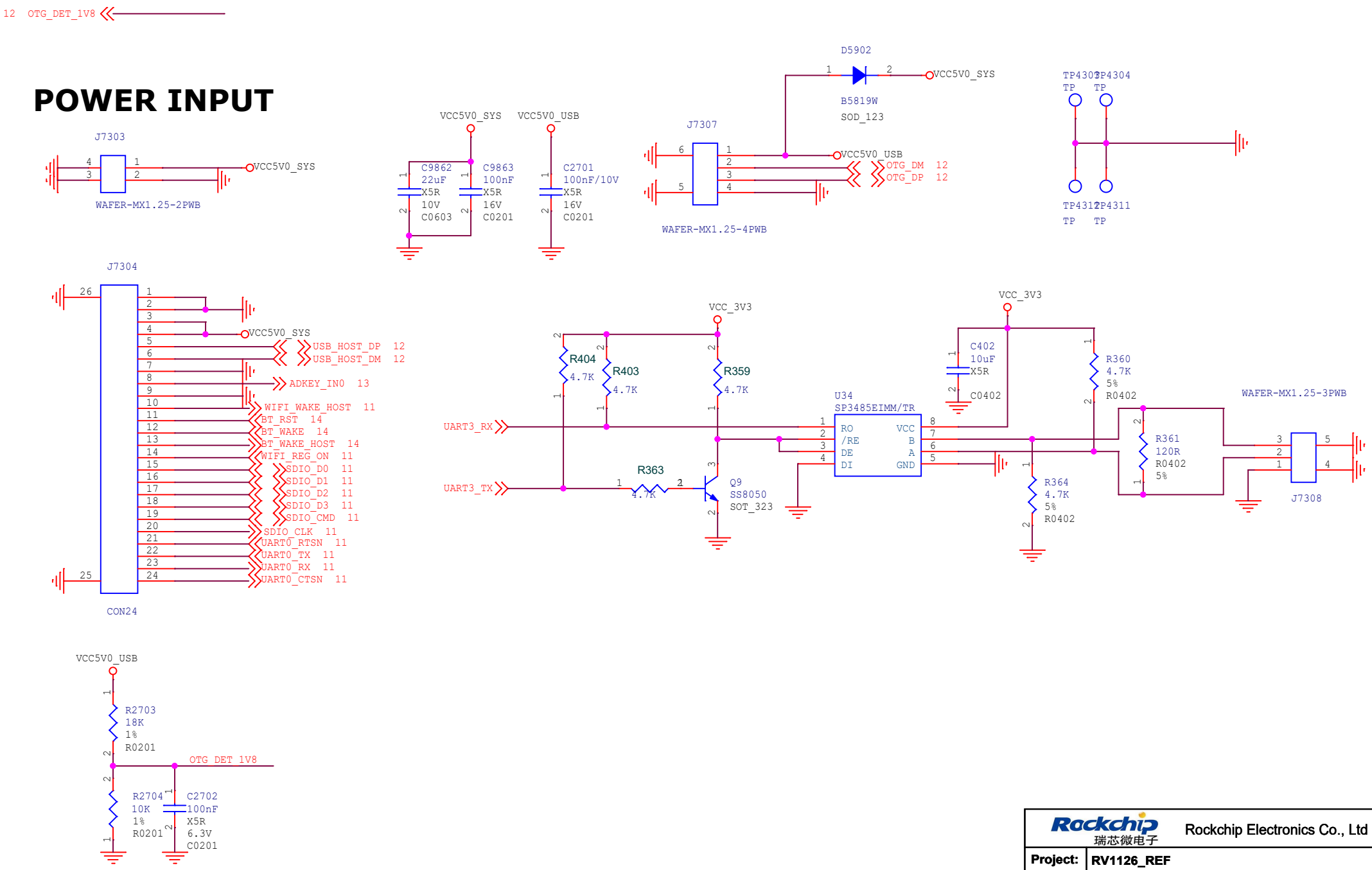

Rockchip 瑞芯微电子	Rockchip Electronics Co., Ltd				
Project:	RV1126_REF				
File:	26.USB OTG				
Date:	Monday, August 07, 2023			Rev:	V1.1
Designed by:	Yanhong.Li	Reviewed by:	<Checker>	Sheet:	20 of 34

Discrete Power

Discrete power supply is recommended for the following solutions:
1) Less peripheral equipment and less power supply
2) Small PCB space
3) The following discrete power supply solutions can reduce some devices according to the actual products,
Please read the notes on the power supply below.

Power Sequence: 1 VCC_0V8

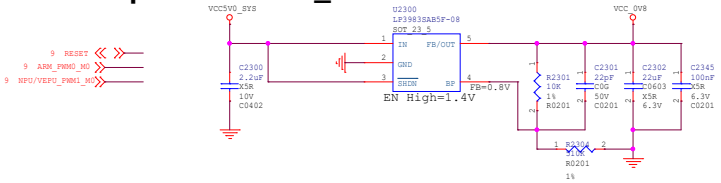

Power Sequence: 2 VDD_LOGIC

Power Sequence: 2 VDD_ARM

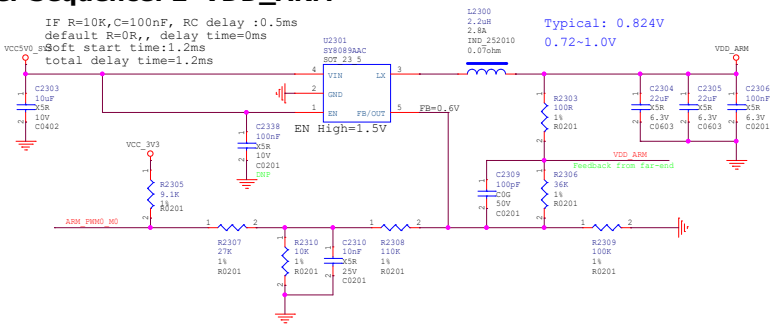

Power Sequence: 2 VDD_NPU_VEPU

NOTE:
Recommend ETA3446 for better ripple.

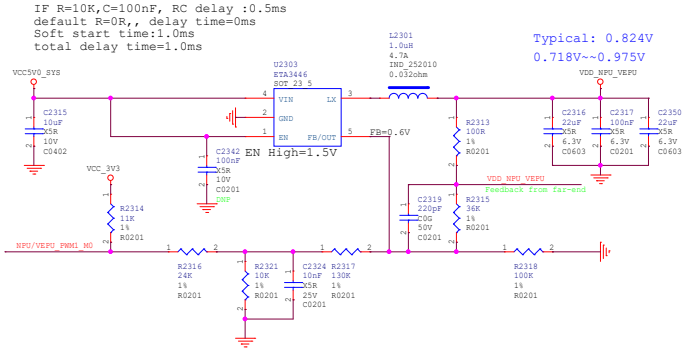

VDD_LOG/NPU/VEPU powEr supply selection	R2314	R2316	R2317	R2360	Voltage range	NOTE
VDD_LOG/NPU/VEPU three-way merge	24K	12K	330K	0R	0.72V~0.88V	(1)
only VDD_NPU_VEPU is powered together	11K	24K	130K	NC	0.715V~0.975V	(2)

NOTE:
(1) Logic is combined with NPU and vepu:
the maximum voltage is only 0.88v, which makes the frequency of NPU not run very high.
It is only suitable for rv1109 and rv1126 without NPU high performance.

(2) Only NPU is combined with vepu:
It is only suitable for rv1109 and rv1126 .

Power Sequence: 3 VCC_1V8

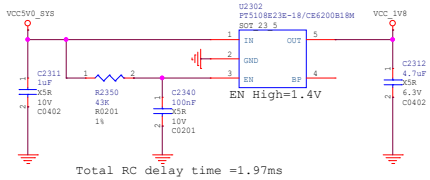

Power Sequence: 4 VCC_DDR

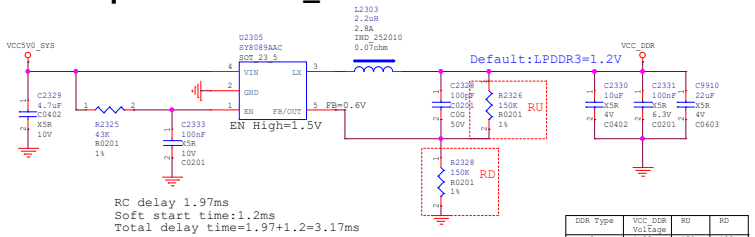

DDR Type	VCC_DDR Voltage	RU	RD
DDR3L	1.35V	150K	120K
DDR3	1.5V	150K	100K
DDR4	1.2V	150K	150K
LPDDR3	1.2V	150K	150K
LPDDR4	1.1V	150K	180K

Power Sequence: 5 VCC_3V3

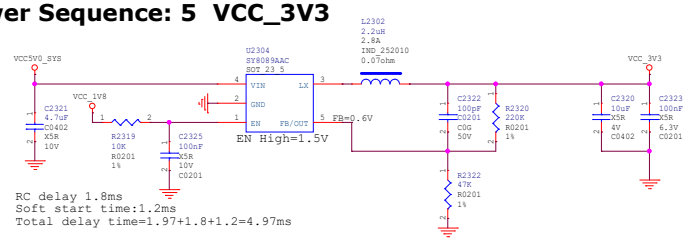

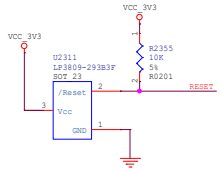

If you use a discrete solution, the power supply can be connected directly and the resistance can be removed.

Rockchip 瑞芯微电子	Rockchip Electronics Co., Ltd		
Project:	RV1126_REF		
File:	23.Discrete Power for System		
Date:	Monday, August 07, 2023	Rev:	V1.3
Designed by: Yanhong.Li	Reviewed by: <Checker>	Sheet:	23 of 54

DDR4 2x16bit

NOTE:
The sequence of DQ shall be done according to the template and shall not be adjusted or changed
Refer to the latest AVL for parts selection.

Note:
This is DDR template<RV1126_RV1109_Template_DDR4P216DD6_V10_20200325>.Six layers PCB.
If only need one pcs DDR, please must use U3200(lane0,lane2).

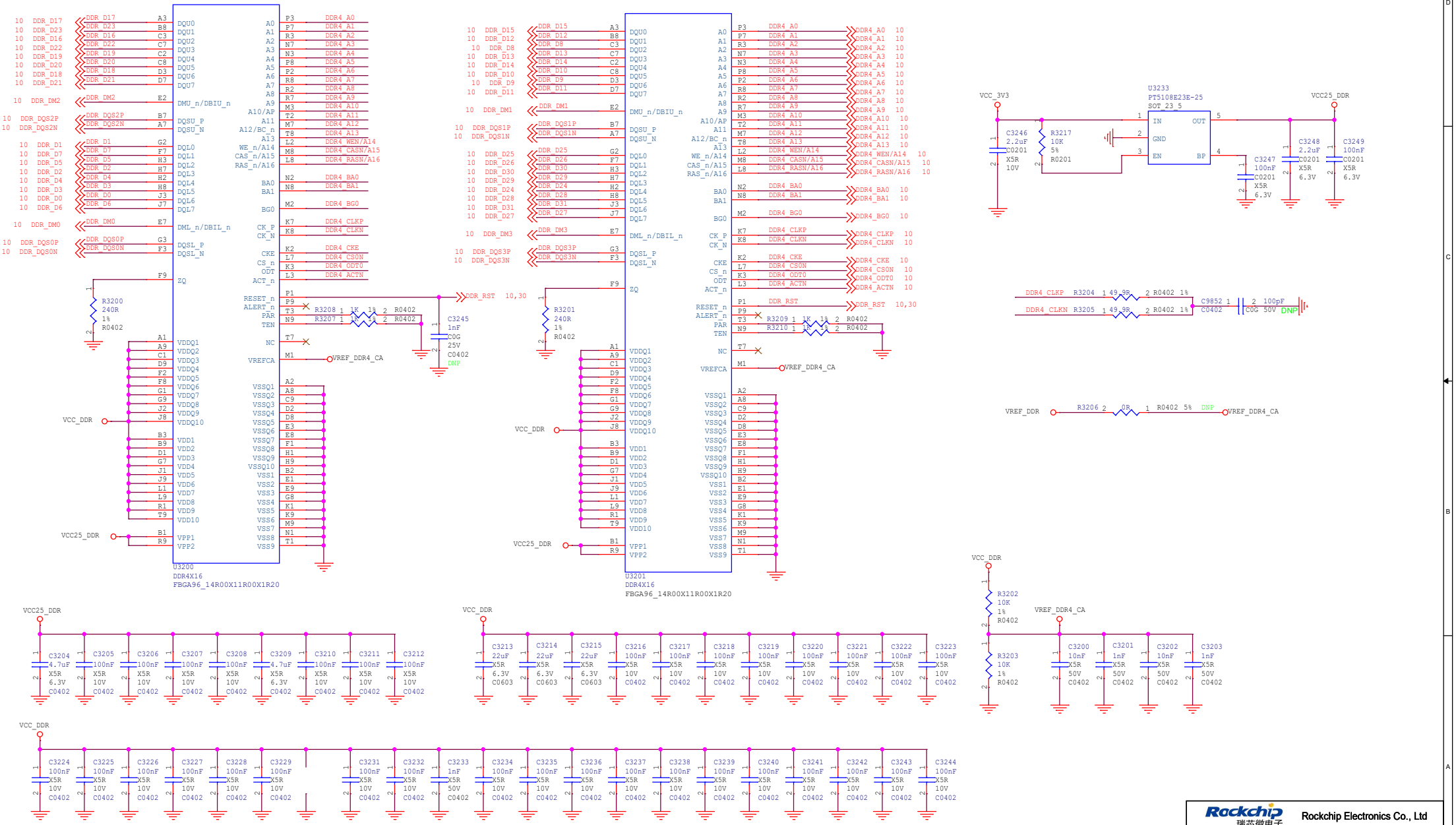

Rockchip 瑞芯微电子	Rockchip Electronics Co., Ltd				
Project:	RV1126_REF				
File:	31. DRAM_LPDDR3_32 bit				
Date:	Monday, August 07, 2023			Rev:	V1.3
Designed by:	Yanhong.Li	Reviewed by:	<Checker>	Sheet:	30 of 54

eMMC

NOTE:
Refer to the latest AVL for parts selection.
NOTE:
All the power filter capacitors should be placed close to the power pins of SOC.

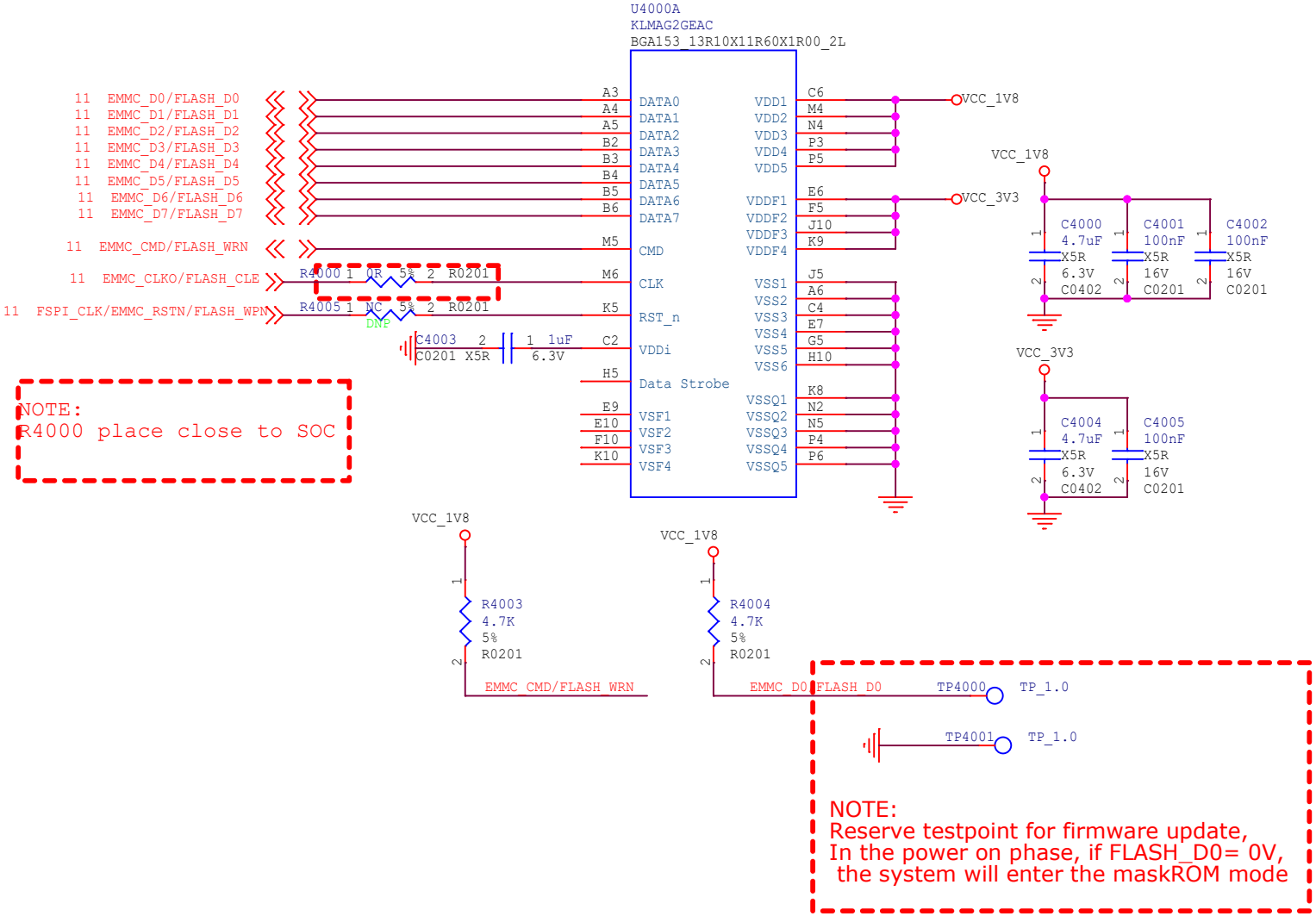

NOTE:
R4000 place close to SOC

NOTE:
Reserve testpoint for firmware update,
In the power on phase, if FLASH_D0= 0V,
the system will enter the maskROM mode

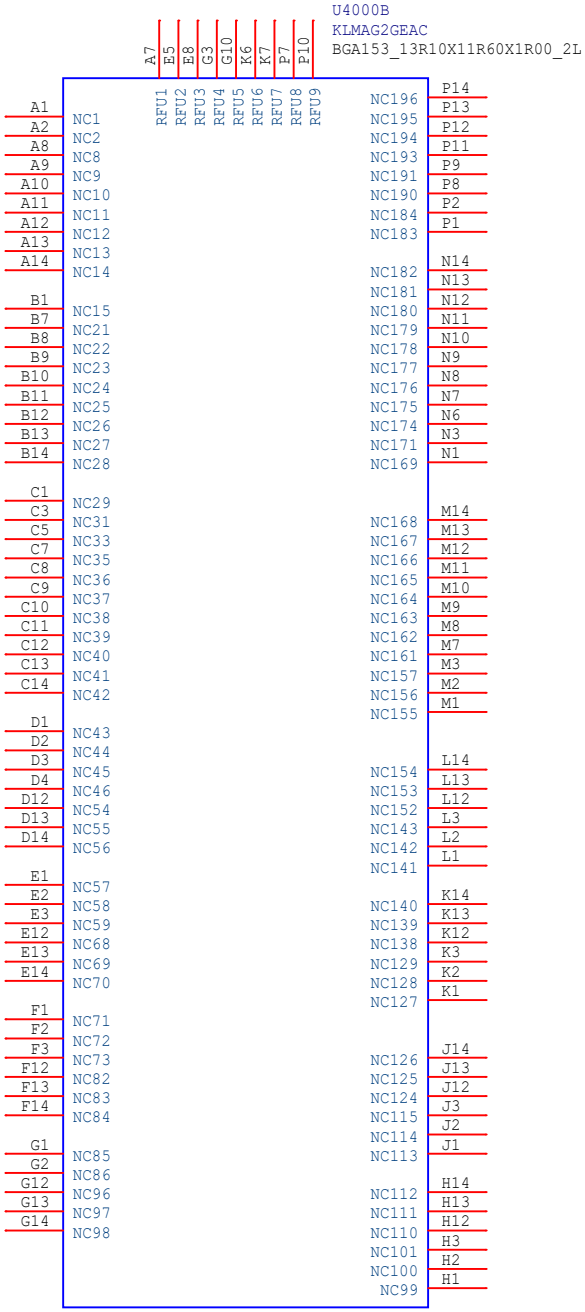

Rockchip 瑞芯微电子	Rockchip Electronics Co., Ltd				
Project:	RV1126_REF				
File:	40.Flash-eMMC Flash				
Date:	Monday, August 07, 2023			Rev:	V1.3
Designed by:	Yanhong.Li	Reviewed by:	<Checker>	Sheet:	32 of 54

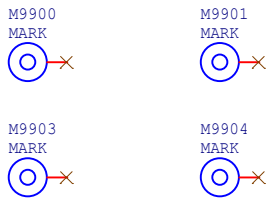

Rockchip 瑞芯微电子	Rockchip Electronics Co., Ltd				
Project:	RV1126_REF				
File:	99.MARK/HOLE				
Date:	Monday, August 07, 2023			Rev:	V1.1
Designed by:	Yanhong.Li	Reviewed by:	<Checker>	Sheet:	34 of 34

Entrance Gate Solution

4 lane dual LVDS/MIPI Camera

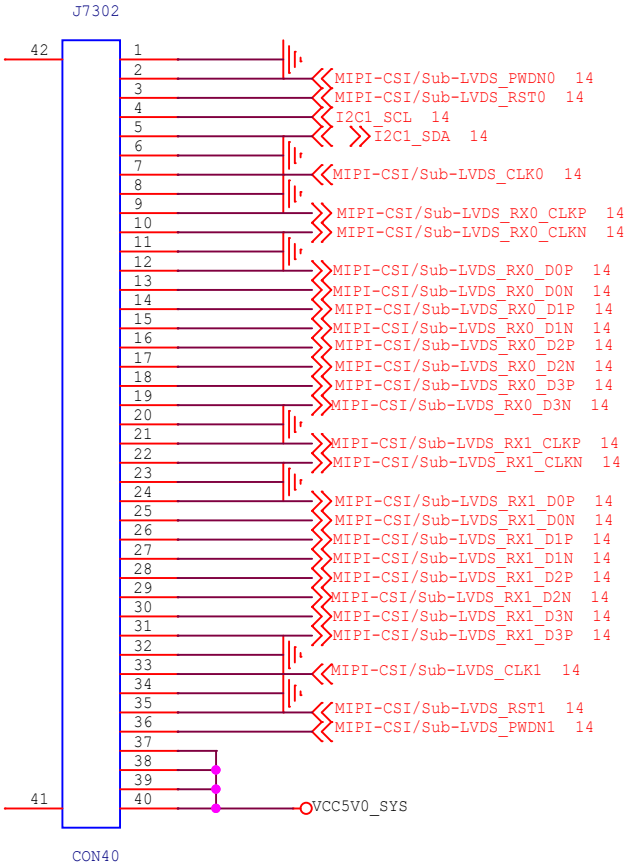

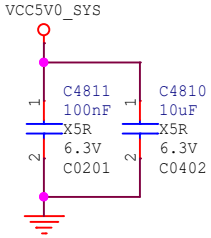

Rockchip 瑞芯微电子	Rockchip Electronics Co., Ltd				
Project:	RV1126_REF				
File:	48.Dual Sub-LVDS Camera(IR+RGB)				
Date:	Monday, August 07, 2023			Rev:	V1.3
Designed by:	Yanhong.Li	Reviewed by:	<Checker>	Sheet:	39 of 54

PHY

15 RMII_TXD0/GMAC_TXD0
15 RMII_TXD1/GMAC_TXD1
15 RMII_TXEN/GMAC_TXEN
15 RMII_RXDV/GMAC_RXDV
15 RMII_RXER
15 RMII_RXD0/GMAC_RXD0
15 RMII_RXD1/GMAC_RXD1
15 RMII_MDIO/GMAC_MDIO
15 RMII_MDC/GMAC_MDC
15 RMII_CLK/GMAC_CLK
15 EPHY_RSTn

PHY Address/LED

VCC_3V3
R6702 1 4.7K 5% 2 R0201 LED1/PHYAD1
R6704 1 4.7K 5% 2 R0201 LED0/PHYAD0

default
RMII_CLK/GMAC_CLK R6700 1 22R 5% 2 R0201 XTAL2
MAC-----> PHY

1. No crystal:
R6700,R6703,R6712, R6724 are sodered.
R6708,Y6700,C6702,C6703,R6717 are DNP.

2. With crystal
R6700,R6703,R6712, R6724 are DNP.
R6708,Y6700,C6702,C6703,R6717 are soldered.

MII/RMII Selection

RXDV 1 R6722 4.7K 5% R0201 2 VCC_3V3

Pull High for RMII mode(default)

WOL/LED0 Selection

RXD1 R6725 1 4.7K 2 5% R0201

Pull Low for LED0 Mode(default)
Pull High for WOL Mode
WOL:Wake-on-LAN

UTP / Fiber Selection

RXER R6731 1 4.7K 2 5% R0201

Pull Low for UTP Mode(default)
Pull High for Fiber Mode

Close to CPU

RMII_TXD0/GMAC_TXD0 R6707 1 2 22R 5% R0201 TXD0
RMII_TXD1/GMAC_TXD1 R6710 1 2 22R 5% R0201 TXD1
RMII_TXEN/GMAC_TXEN TXEN

Close to PHY

RMII_RXD0/GMAC_RXD0 R6713 1 2 22R 5% R0201 RXD0
RMII_RXD1/GMAC_RXD1 R6714 1 2 22R 5% R0201 RXD1
RMII_RXDV/GMAC_RXDV CRS_DV
RMII_RXER RXER

EPHY_RSTn PHYRSTB
RMII_MDC/GMAC_MDC MDC
RMII_MDIO/GMAC_MDIO MDIO

RMII REF_CLK direction

RMII_CLK_CTL 1 R6712 4.7K 5% R0201 2 VCC_3V3

Pull Low for RMII REF_CLK Output mode
Pull High for RMII REF_CLK Input mode

This pin is pulled high by an external 4.7Kohm.
This pin is used for the interrupt function only when in the RMII mode.

RMII_INT 1 R6720 4.7K 5% R0201 2 VCC_3V3

VCC_3V3
R6723 1.5K 5% R0201
R6724 10K 5% R0201
MDIO TXD3

U6701
RTL8201F
QFN32_5R00X5R00X1R00_T

TXD1 17 TXD1
TXD3 18 TXD2
TXEN 19 TXD3
PHYRSTB 20 TXEN
MDC 21 PHYRSTB
MDIO 22 MDC
LED0/PHYAD0 23 MDIO
24 LED0/PHYAD0/PMEB

8 RXDV
7 AVDD33_1 VCC_3V3
6 MDI1- RX0-
5 MDI1+ RX0+
4 MDI0- TX0-
3 MDI0+ TX0+
2 AVDD100UT AVDD10
1 RSET RTL8201F_RSET

AVDD10

VCC_3V3
R6735 4.7K R0201 5% DNP
PHYRSTB
C6722 100nF X5R 10V C0201

DVDD10 VCC_3V3

Low-tension area

High-tension area

Differential mode lightning protection

Differential mode

U6702
MS10232

TX0+ 1
TX0- 3
RX0+ 6
RX0- 8
16 TX+
14 TX-
13 RX+
11 RX-
POE12
POE36

J7301
WAFER-MX1.25-6PWB

C6729 10nF X7R 100V C0402
C6730 10nF X7R 100V C0402
R6744 75R 1% R0805
R6743 75R 1% R0805
C9861 102/2KV C1206

C6727 22nF C0402 X5R 25V
C6728 22nF C0402 X5R 25V

DVDD10
C6714 100nF X5R 10V C0201
close to PIN29

AVDD10
C6715 100nF X5R 10V C0201
close to PIN2

RTL8201F_RSET
R6733 2.49K 1% R0201

VCC_3V3
C6716 4.7uF X5R 10V C0402
C6717 4.7uF C0402 X5R 10V
C6718 100nF C0201 X5R 16V
close to PIN14

C6720 100nF C0201 X5R 16V
C6721 100nF C0201 X5R 16V
close to PIN7,30

Rockchip 瑞芯微电子	Rockchip Electronics Co., Ltd				
Project:	RV1126_REF				
File:	67.Ethernet-EPHY_RMII				
Date:	Monday, August 07, 2023			Rev:	V1.3
Designed by:	Yanhong.Li	Reviewed by:	<Checker>	Sheet:	46 of 54

Audio3 for Discrete Power solution

NOTE: IO level=3.3V ,VCCIO7_VDD=3.3V

NOTE:
1. The MIC IN of ES8311 is recommended to use differential MIC.
2. There is a loopback funtion inside ES8311, so the hardware loopback circuit can be delected outside.
3. If the audio solution is changed, the loopback circuit will need to use.
Here is the differential LOOP BACK circuit fot reference.

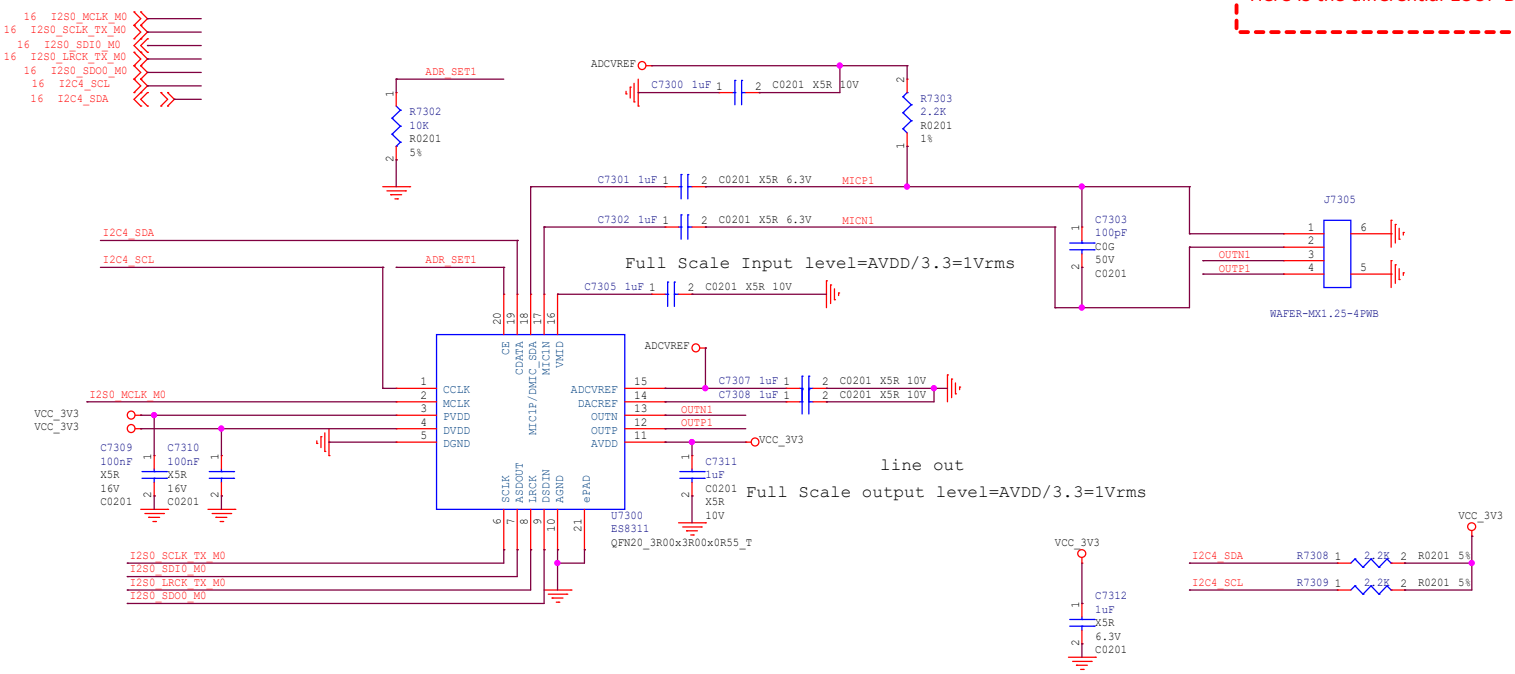

Rockchip 瑞芯微电子	Rockchip Electronics Co., Ltd				
Project:	RV1126_REF				
File:	73.Audio3(Discrete solution)				
Date:	Monday, August 07, 2023			Rev:	V1.3
Designed by:	Yanhong.Li	Reviewed by:	<Checker>	Sheet:	51 of 54